Electrolux PROFESSIONAL

ITEM #

MODEL #

NAME #

SIS #

AIA #

Drop-In
Drop-in refrigerated stainless steel surface (1 GN container capacity)

341054 (D14C1) Drop-in refrigerated stainless steel surface (1 GN container capacity)

Short Form Specification

Item No.

Designed to be positioned in flush installation providing improved cleanability and suitable for modern design installations. Designed to serve the food on plates. Food introduced at the correct temperature maintains its core temperature according to Afnor Standards. Automatic defrosting guarantees evaporators clearance and efficient well cooling. Digital control with temperature display with precise adjustment (0,1°C). Fully compliant HACCP digital controls include visible alarms. The bottom is equipped with copper tubes to ensure proper cooling, with this system the air touches the cold surface and gets cooled. Equipped with a drain hole to easily discharge top condensation. Wells in 304 AISI stainless steel with rounded corners to facilitate cleaning operations. The well is also equipped with a drain hole. High-density expanded polyurethane foam with cyclopenthane guarantees excellent well insulation to reduce energy dispersion. R290 refrigerant gas (GWP=3) to reduce environmental impact and increase cooling efficiency. Pressed Stainless steel top 30mm deep with rounded edges and drain hole for easier cleaning.

APPROVAL:

Main Features

- CB and CE certifed by a third party notified body.
- Designed to be positioned in flush installation providing improved cleanability and suitable for modern design installations.
- Precise temperature control and setting at 0,1°C .
- As standard the product comes with digitally controlled thermostat which is in line of HACCP norms and provides visual alarm as a warning of the increasing or decreasing temperatures.
- Available drop-in dimensions: 1, 2, 3, 4, 5, 6 GN.
- Food introduced at the correct temperature maintains its core temperature according to Afnor Standards.
- Automatic defrosting guarantees evaporators clearance and efficient well cooling.
- Remote version is available.
- Designed to serve the food on plates .
- Equipped with a drain hole to easily discharge top condensation.
- Surface mat is available as an accessory.

Construction

- Well bottom is inclined to facilitate water drainage.
- Well in 304 AISI stainless steel with rounded corners to facilitate cleaning operations. The well is also equipped with a drain hole.
- Electronic control with temperature display.
- IPx2 water protection.
- The bottom is equipped with copper tubes to ensure proper cooling, with this system the air touches the cold surface and gets cooled.
- Pressed Stainless steel top 30mm deep with rounded edges and drain hole for easier cleaning.

Sustainability

- Hydrocarbon refrigerant gas R290 for the lowest environmental impact (GWP=3) - CFC and HCFC free.
- High-density expanded polyurethane foam with cyclopenthane guarantees excellent well insulation to reduce energy dispersion.

Drop-In
Drop-in refrigerated stainless steel surface (1 GN container capacity)

Rear side

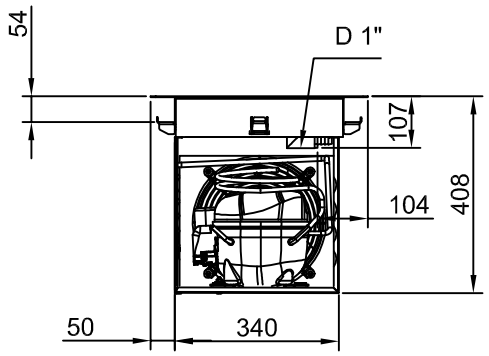

Side

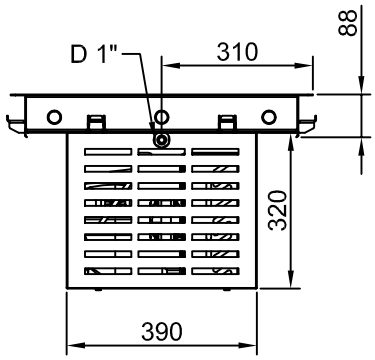

D = Drain
EI = Electrical inlet (power)

Top

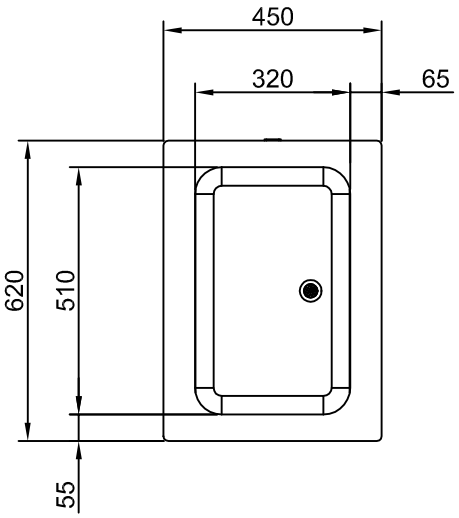

Electric	
Supply voltage:	
341054 (D14C1)	220-240 V/1N ph/50 Hz
Electrical power max.:	0.47 kW
Water:	
Water drain outlet size:	1"
Key Information:	
External dimensions, Width:	450 mm
External dimensions, Depth:	620 mm
External dimensions, Height:	390 mm
Net weight:	30.1 kg
Shipping weight:	44 kg
Shipping height:	510 mm
Shipping width:	490 mm
Shipping depth:	660 mm
Shipping volume:	0.16 m³
Set temperature:	-10 / 0 °C
Top temperature:	-10 / 0 °C
Refrigeration Data	
Refrigerant type:	R290
Sustainability	
Noise level:	59 dBA

The company reserves the right to make modifications to the products without prior notice. All information correct at time of printing.

2024.10.08

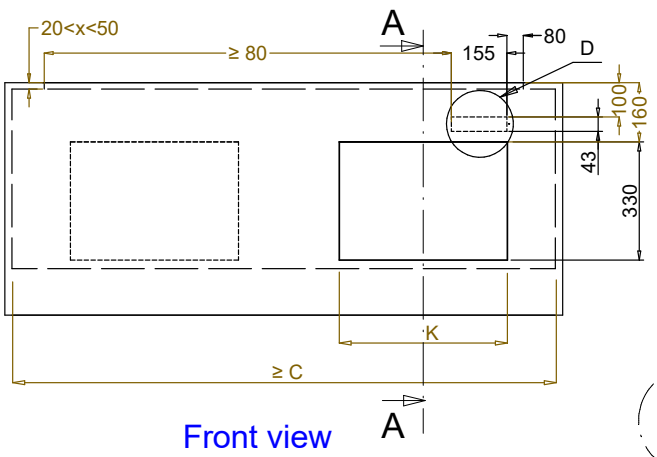

Front view
Scala: 1:10

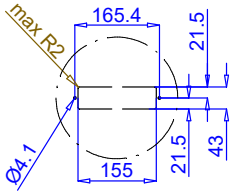

Dettaglio D
Scala 1:7

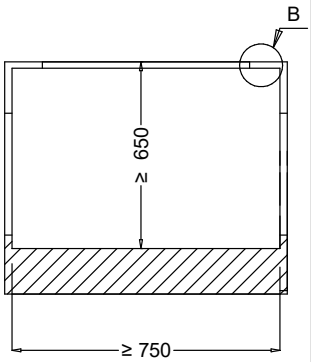

Section Cut A-A
Scala: 1:10

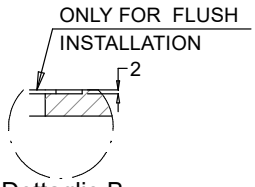

Dettaglio B
Scala 1:2

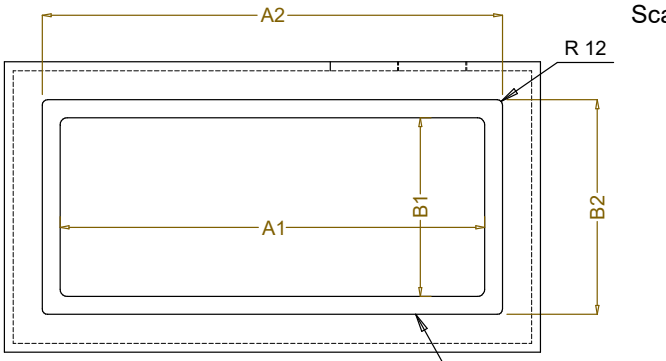

Top view
Scala: 1:20

CAPACITY	CUTOUT		LOWERING FOR FLUSH INSTALLATION		C	K
	A1	B1	A2	B2		
1GN	370	580	454	624	550	380
2GN	690		774		870	470
3GN	1020		1104		1200	
4GN	1340		1424		1520	
5GN	1660		1744		1840	
6GN	1990		2074		2170	

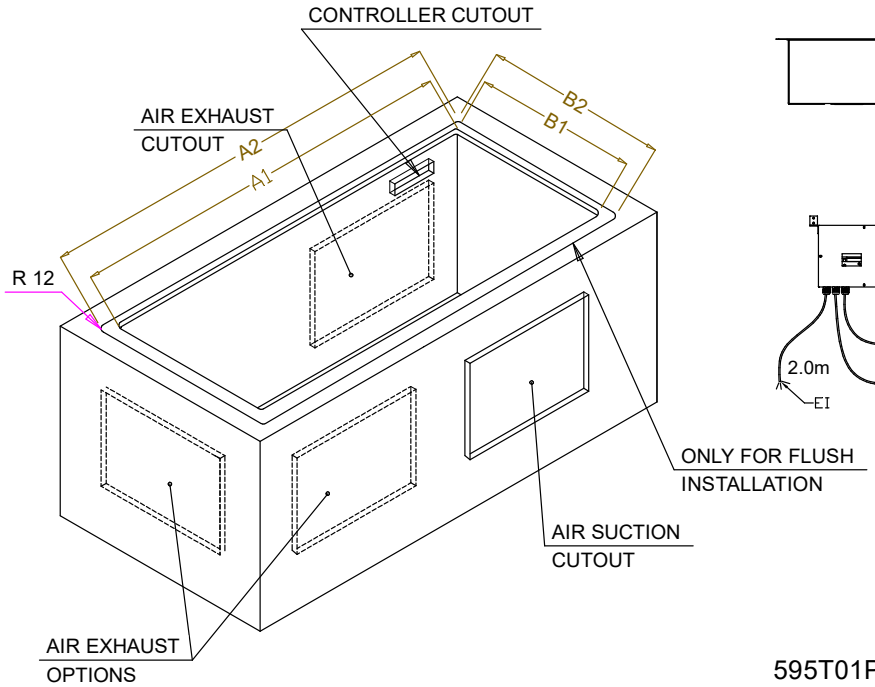

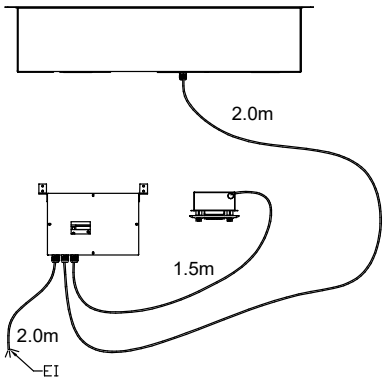

595T01P00 - COLD S/S SURFACE

The company reserves the right to make modifications to the products without prior notice. All information correct at time of printing.

2024.10.08